Project ref. no.: PR-0057

Hacona Kft.
H-1165 Budapest,
Ujszasz u. 45/b, T ep.
Hungary

Tel.: +36 (1) 401 3030
Fax: +36 (1) 401 3031
E-mail: mail@hacona.com
Web: www.hacona.com

VAT No.:
HU10406634

Bank: OTP Bank Nyrt. 1163 Budapest, Jokai u. 1/b.
Account No.: EUR IBAN: HU 18 1176 3165 0734 7885 0000 0000
SWIFT-BIC: OTPVHUHB
USD IBAN: HU 23 1176 3165 1320 7018 0000 0000
SWIFT-BIC: OTPVHUHB

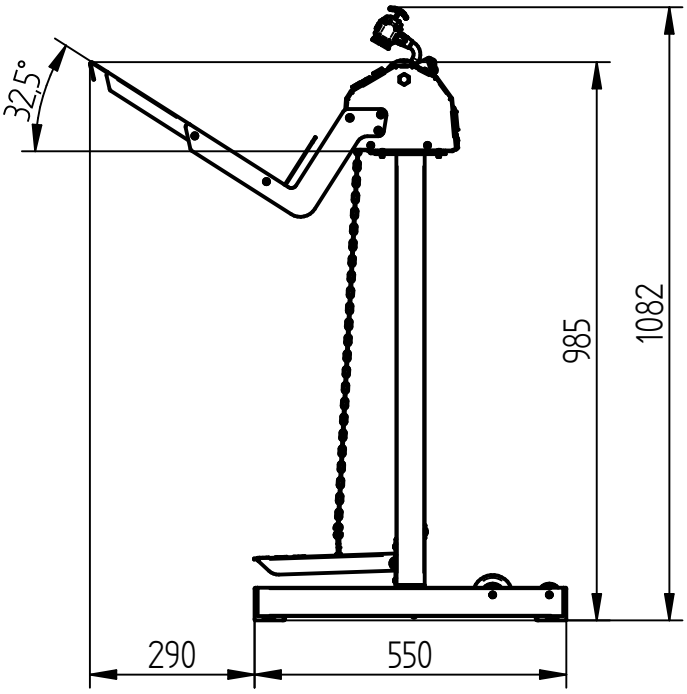

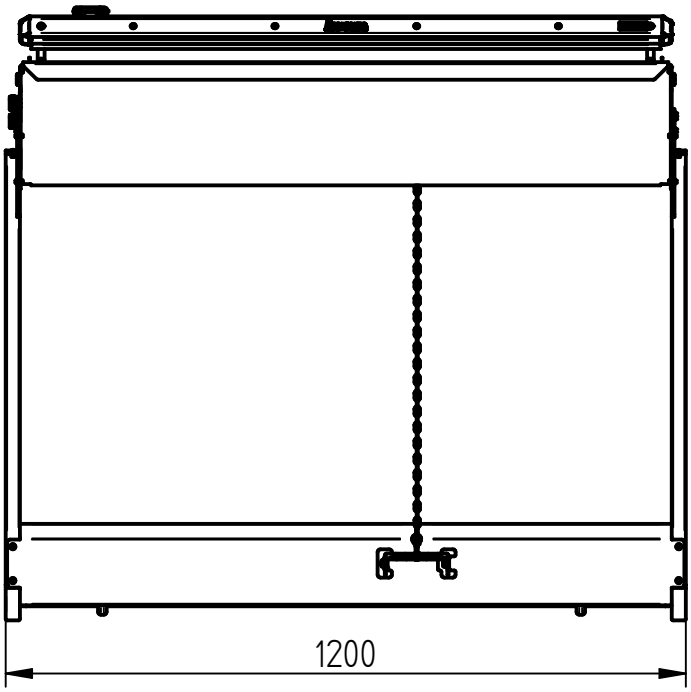

Hacona Kft.
H-1165 Budapest,
Ujszasz u. 45/b, T ep.
Hungary

Tel.: +36 (1) 401 3030
Fax: +36 (1) 401 3031
E-mail: mail@hacona.com
Web: www.hacona.com

VAT No.:
HU10406634

Bank: OTP Bank Nyrt. 1163 Budapest, Jokai u. 1/b.
Account No.: EUR IBAN: HU 18 1176 3165 0734 7885 0000 0000
SWIFT-BIC: OTPVHUHB
USD IBAN: HU 23 1176 3165 1320 7018 0000 0000
SWIFT-BIC: OTPVHUHB